# Model DUB361 CORDLESS BLOWER

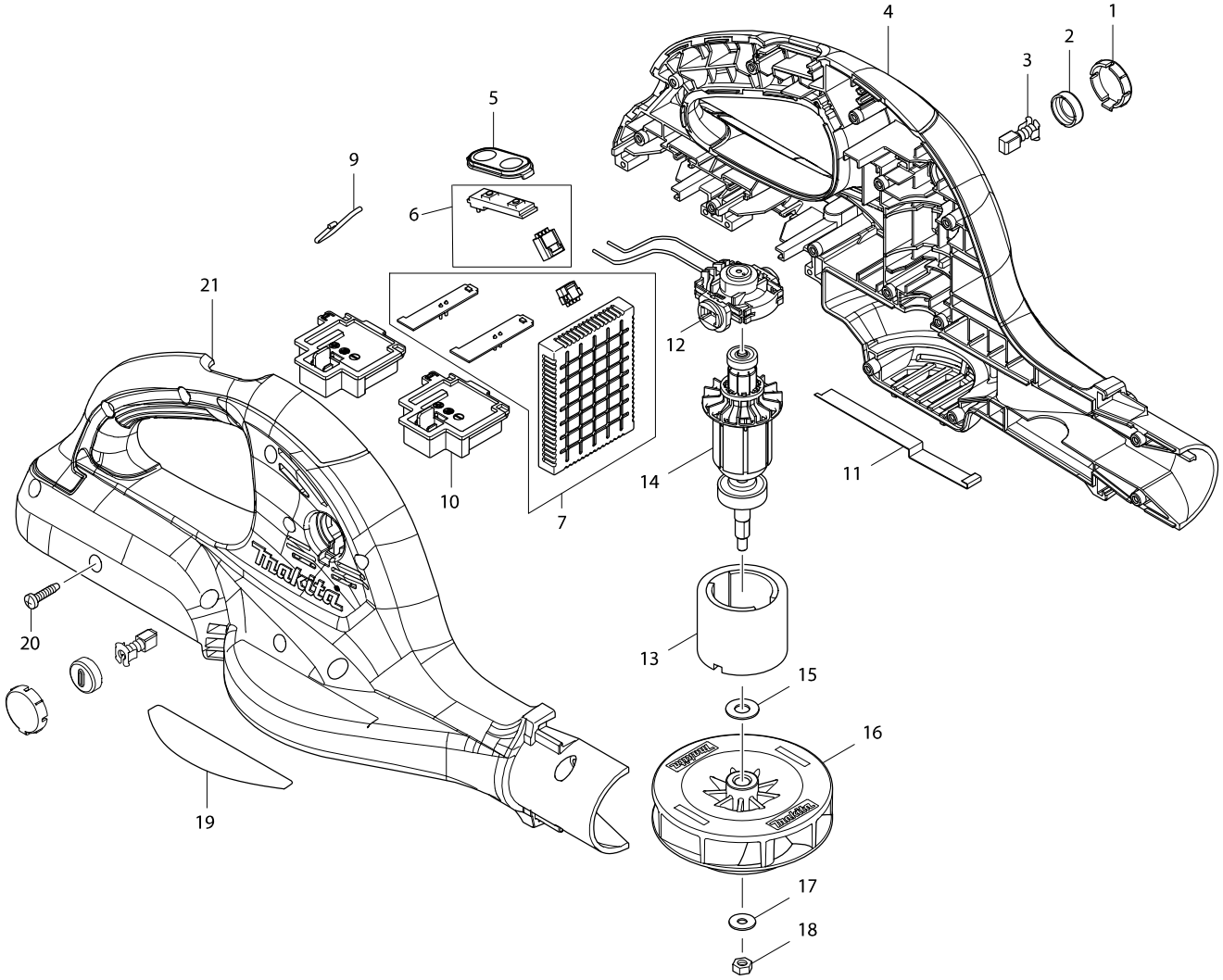

# Model DUB361 CORDLESS BLOWER



| Položka | Objednávacie | Popis | I/C | ks | N/O | Možnosť 1 | Možnosť 2 | Poznámka |
|---|---|---|---|---|---|---|---|---|
| 001 | 452145-4 | HOLDER CAP COVER | | 2 | | | | |
| 002 | 643929-3 | VIEČKO | | 2 | | | | |
| 003 | 191971-3 | UHLÍKY CB-430, 438 (CB-420) | | 1 | | | | |
| 004 | 187850-1 | HOUSING SET | | 1 | | | | |
| C10 | 263005-3 | KOLÍK GUMA 6 2414 | | 4 | | | | |
| C20 | 891050-4 | CAUTION LABEL | | 1 | | | | |
| D10 | | INC. 21 | | | | | | |
| 005 | 140463-9 | SWITCH PLATE COMPLETE | | 1 | | | | |
| 006 | 620282-4 | SWITCH COMPLETE | | 1 | | | | |
| 007 | 620276-9 | CONTROLLER | | 1 | | | | |
| 009 | 325973-9 | HANGER | | 1 | | | | |
| 010 | 644808-8 | TERMINAL | | 2 | | | | |
| 011 | 346328-5 | EARTH PLATE | | 1 | | | | |
| 012 | 632B93-7 | ENDBELL COMPLETE | | 1 | | | | |
| 013 | 638420-4 | STATOR 220V BSC/BSS/BPB | | 1 | | | | |
| 014 | 619260-9 | ARMATURE | | 1 | | | | |
| 015 | 253865-1 | PODLOŽKA 8 | | 1 | | | | |
| 016 | 240124-2 | FAN 95 | | 1 | | | | |
| 017 | 253194-2 | PODLOŽKA 5 | | 1 | | | | |
| 018 | 252177-9 | HEX.NUT M5-8 | | 1 | | | | |
| 019 | 815N43-1 | DUB361 NAME PLATE | | 1 | | | | |
| 020 | 265995-6 | SKRUTKA SAMOREZNÁ 4x18 | | 14 | | | | |
| 021 | 187850-1 | HOUSING SET | | 1 | | | | |
| C10 | 263005-3 | KOLÍK GUMA 6 2414 | | 4 | | | | |
| C20 | 891050-4 | CAUTION LABEL | | 1 | | | | |
| D10 | | INC. 4 | | | | | | |
| A01 | 166095-4 | SHOULDER BELT | | 1 | | | | |
| A02 | 452123-4 | LONG NOZZLE | | 1 | | | | |
| E01 | 688165-4 | LINE FILTER | | 1 | | | | |
| E02 | 807811-2 | SOUND 96DB LABEL | | 1 | | | | |